Xtreme-J 750

Section Details | Dual Pane
PVC Interior & Exterior Trims

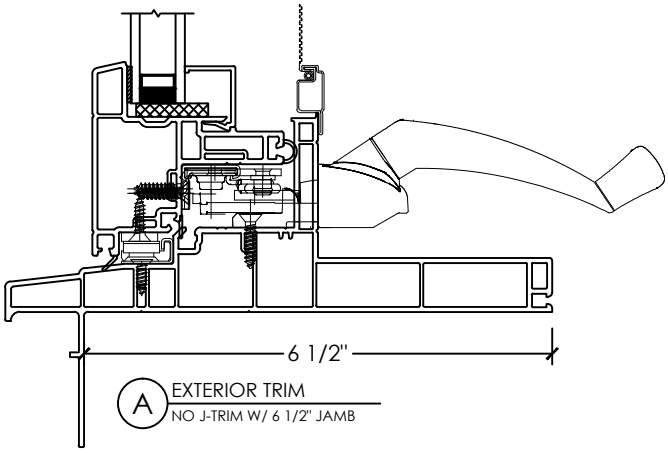

A EXTERIOR TRIM
NO J-TRIM W/ 6 1/2" JAMB

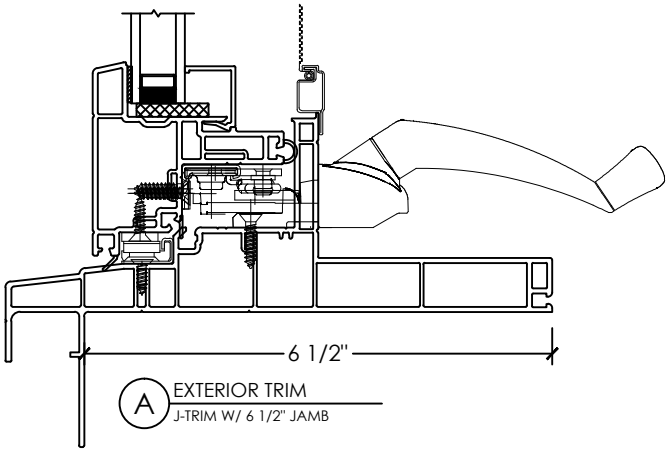

A EXTERIOR TRIM
J-TRIM W/ 6 1/2" JAMB

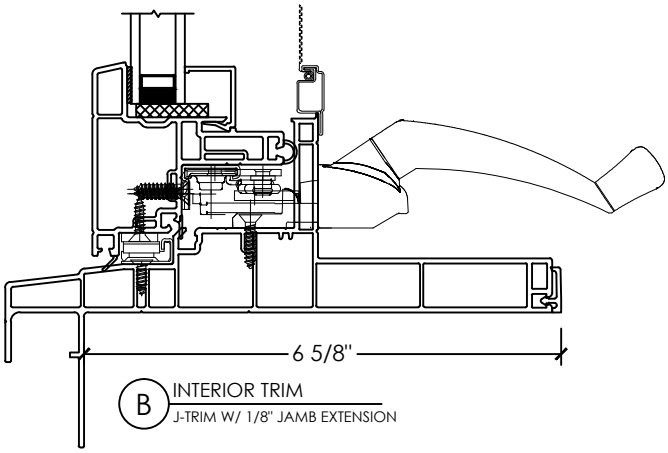

B INTERIOR TRIM
J-TRIM W/ 1/8" JAMB EXTENSION

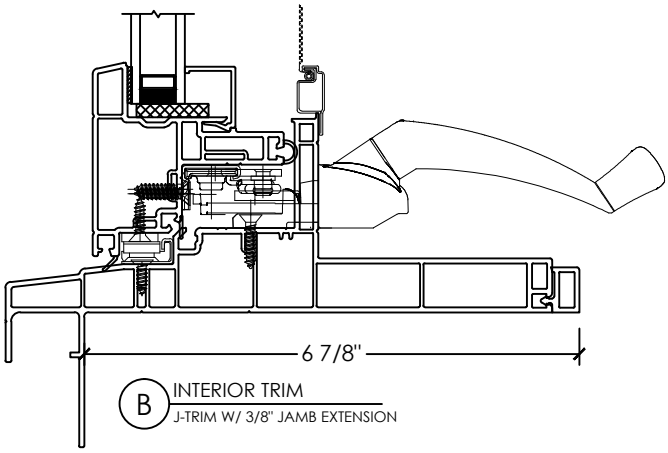

B INTERIOR TRIM
J-TRIM W/ 3/8" JAMB EXTENSION